NR ELEMENTU	NUMER CZĘŚCI	OPIS	ILOŚĆ
1	uchwyt wrzeciona2		1

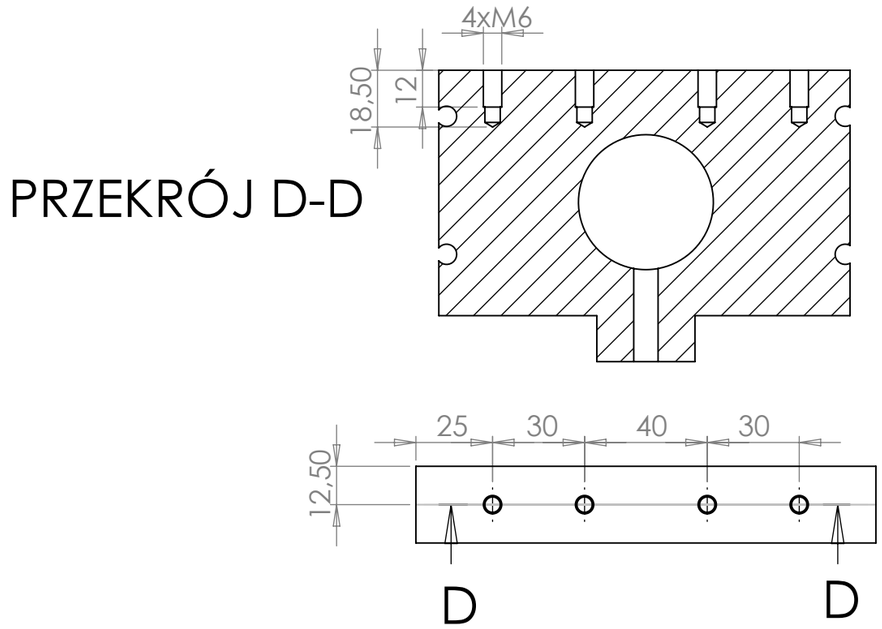

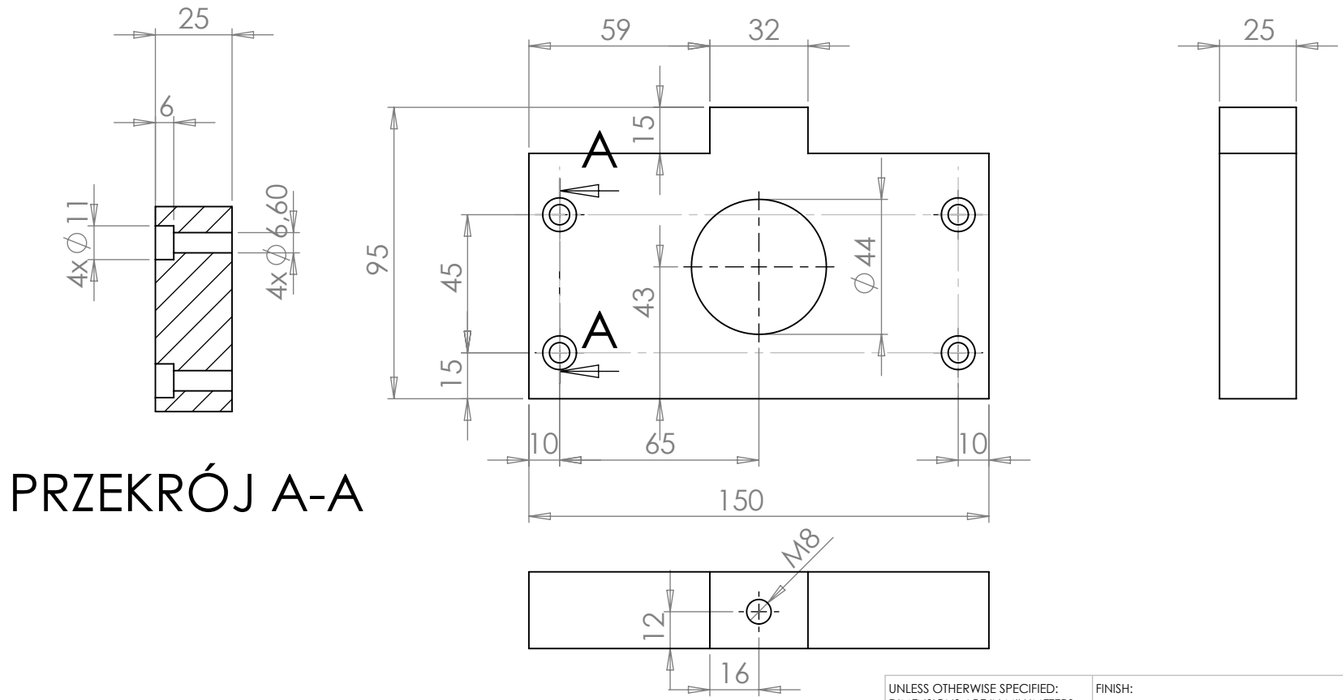

UNLESS OTHERWISE SPECIFIED: DIMENSIONS ARE IN MILLIMETERS SURFACE FINISH: TOLERANCES: LINEAR: ANGULAR:	FINISH:	DEBUR AND BREAK SHARP EDGES	DO NOT SCALE DRAWING	REVISION

	NAME	SIGNATURE	DATE
DRAWN			
CHK'D			
APPV'D			
MFG			
Q.A			

MATERIAL:

WEIGHT:

TITLE:

DWG NO. uchwyt wrzeciona2 A3

SCALE:1:1 SHEET 1 OF 1